Work Order ID 73365

Wednesday, August 31, 2011 12:46:39 PM

Item ID: D350-748-201 **Accept** **Setup Start** **Stop**

Revision ID:

Item Name: Crosstube Installation, High Aft

Start Date: 8/31/2011 **Start Qty:** 1.00 **Cust Item ID:**

Required Date: 9/12/2011 **Req'd Qty:** 1.00 **Customer:**

Reference:

Approvals: **Process Plan:** CL **Date:** 11/08/31 **Tooling:** _____ **Date:** _____ **Run Start** **Stop**

QC: _____ **Date:** _____ **SPC (Y/N):** _____ **Date:** _____

Sequence ID/ Work Center ID	Operation Description	Set Up/ Run Hours	Tool ID	Tool #	Plan Code	Accept Qty	Reject Qty	Reject Number	Insp. Stamp
Draw Nbr / **Revision Nbr**									
D350-748-241 / F									
100	DOCUMENT CONTROL	0.00							
DC	**Memo**	0.00							
Document Control	Photocopy bluefile & type labels per PPD350-748-201 CHG002								
110	BENDING MACHINE - CROSSTUBES	0.00							
CNC Bend 2	**Memo**	0.00							
CNC Alpha 160 Bender	Bend tube as per Dwg D350-748-241 using CNC bender program D350A and Folio FT_____								
120	QC15- Crosstube Dimensional Check	0.00							
QC	**Memo**	0.00							
Quality Control									

SCRAP

Pro →

Dart Aerospace Ltd

W/O: 73365	WORK ORDER CHANGES						
DATE	STEP	PROCEDURE CHANGE	By	Date	Qty	Approval Chief Eng / Prod Mgr	Approval QC Inspector

Part No: D350-748-201 PAR #: N/A Fault Category: Handling Gear X-tube NCR: Yes No DQA: Date: 11.09.08

11 SB37 Resolution: SCRAP Disposition: SCRAP QA: N/C Closed: Date: 11/09/08

NCR:	WORK ORDER NON-CONFORMANCE (NCR) 3009.77							
DATE	STEP	Description of NC Section A	Corrective Action Section B: Initial Chief Eng	Action Description Chief Eng	Sign & Date	Verification Section C	Approval Chief Eng	Approval QC Inspector
11.09.01	110	Tube has heavy kinks on inner bend. Tube crushing >6% ⊕kinks	~~11.09.~~ 11.09.02	SCRAP TUBE. 11.09.01	SAD 11-09-06	11/09/06	11.09.02 (BB DELEGATE)	11/09/06
		R.C. Process	per					

NOTE: Date & initial all entries

Work Order ID 73365

Wednesday, August 31, 2011 12:46:39 PM

Item ID: D350-748-201

Revision ID:

Item Name: Crosstube Installation, High Aft

Start Date: 8/31/2011 **Start Qty:** 1.00

Required Date: 9/12/2011 **Req'd Qty:** 1.00

Reference:

Accept

Setup **Start**

Stop

Cust Item ID:

Customer:

Run **Start**

Stop

Approvals: **Process Plan:** _____ **Date:** _____ **Tooling:** _____ **Date:** _____

QC: _____ **Date:** _____ **SPC (Y/N):** _____ **Date:** _____

Sequence ID/ Work Center ID	Operation Description	Set Up/ Run Hours	Tool ID	Tool #	Plan Code	Accept Qty	Reject Qty	Reject Number	Insp. Stamp
125		0.00							
HandFXtube	**Memo**	0.00							
Hand Finishing Crosstubes	***Stress relief*** Heat treat crosstube as per QSI010 4.3 Temp:_____ Start time:_____ Finish time:_____								
127	QC5- Inspect part completeness to step on W/O	0.00							
QC	**Memo**	0.00							
Quality Control									

Dart Aerospace Ltd

W/O:		WORK ORDER CHANGES					
DATE	STEP	PROCEDURE CHANGE	By	Date	Qty	Approval Chief Eng / Prod Mgr	Approval QC Inspector

Part No: _____ **PAR #:** _____ **Fault Category:** _____ **NCR:** Yes No **DQA:** _____ **Date:** _____

Resolution: _____ **Disposition:** _____ **QA: N/C Closed:** _____ **Date:** _____

NCR:		WORK ORDER NON-CONFORMANCE (NCR)						
DATE	STEP	Description of NC Section A	Corrective Action Section B			Verification Section C	Approval Chief Eng	Approval QC Inspector
			Initial Chief Eng	Action Description Chief Eng	Sign & Date			

NOTE: Date & initial all entries

H:\fFORMS\Quality Assurance\approved QA\NCRWO RevE

Work Order ID 73365

Wednesday, August 31, 2011 12:46:39 PM

Item ID: D350-748-201 **Accept** **Setup Start** **Stop**

Revision ID:

Item Name: Crosstube Installation, High Aft

Start Date: 8/31/2011 **Start Qty:** 1.00 **Cust Item ID:**

Required Date: 9/12/2011 **Req'd Qty:** 1.00 **Customer:**

Reference:

Approvals: **Process Plan:** _____ **Date:** _____ **Tooling:** _____ **Date:** _____ **Run Start** **Stop**

QC: _____ **Date:** _____ **SPC (Y/N):** _____ **Date:** _____

Sequence ID/ Work Center ID	Operation Description	Set Up/ Run Hours	Tool ID	Tool #	Plan Code	Accept Qty	Reject Qty	Reject Number	Insp. Stamp
130	Crosstubes	0.00							
Crosstubes	**Memo**	0.00							
Crosstubes	1-Drill Tube as per Dwg D350-748-241 Using DT8876 Drill Jigs, Set-up drill table as per QSI 010 2-Deburr 3-Engrave Part # and Batch # as per Dwg D350-748-241 4-Remove all marks from tube within limits of D350-748-241 5- Apply a light coat of LPS3 on the interior of tube Batch:_____								
140	QC6- Inspect dimensions to drawing	0.00							
QC	**Memo**	0.00							
Quality Control									

Dart Aerospace Ltd

W/O:		WORK ORDER CHANGES					
DATE	STEP	PROCEDURE CHANGE	By	Date	Qty	Approval Chief Eng / Prod Mgr	Approval QC Inspector

Part No: _____ **PAR #:** _____ **Fault Category:** _____ **NCR:** Yes No **DQA:** _____ **Date:** _____

Resolution: _____ **Disposition:** _____ **QA: N/C Closed:** _____ **Date:** _____

NCR:		WORK ORDER NON-CONFORMANCE (NCR)						
DATE	STEP	Description of NC Section A	Corrective Action Section B			Verification Section C	Approval Chief Eng	Approval QC Inspector
			Initial Chief Eng	Action Description Chief Eng	Sign & Date			

NOTE: Date & initial all entries

H:\fFORMS\Quality Assurance\approved QA\NCRWO RevE

Work Order ID 73365

Wednesday, August 31, 2011 12:46:39 PM

Item ID: D350-748-201 **Accept** **Setup Start** **Stop**

Revision ID:

Item Name: Crosstube Installation, High Aft

Start Date: 8/31/2011 **Start Qty:** 1.00 **Cust Item ID:**

Required Date: 9/12/2011 **Req'd Qty:** 1.00 **Customer:**

Reference:

Run Start **Stop**

Approvals: **Process Plan:** _____ **Date:** _____ **Tooling:** _____ **Date:** _____

QC: _____ **Date:** _____ **SPC (Y/N):** _____ **Date:** _____

Sequence ID/ Work Center ID	Operation Description	Set Up/ Run Hours	Tool ID	Tool #	Plan Code	Accept Qty	Reject Qty	Reject Number	Insp. Stamp
150	Outsource process-Cadplate per QSI017 4.1.9.1	0.00							
Outsource3	**Memo**	0.00							
Outsource process - Cad plate	Issue P/O: _____ Stress relief at 375° for 5 hours Magnetic Particle Inspect per ASTM E1444 Cadium Plate per AMS-QQ-P-416B, Class 1, Type 2 Embrittle relief at 375° for 8 hours, Chromate Treat Possibe Supplier: Southwest United Industries Ensure Certificate of Conformity is attached								
160	Receive & Inspect for Damage & Mat'l Certs	0.00							
Packaging	**Memo**	0.00							
Packaging	Ensure certificate of conformity is attached								
170	QC5- Inspect part completeness to step on W/O	0.00							
QC	**Memo**	0.00							
Quality Control									

Dart Aerospace Ltd

W/O:		WORK ORDER CHANGES					
DATE	STEP	PROCEDURE CHANGE	By	Date	Qty	Approval Chief Eng / Prod Mgr	Approval QC Inspector

Part No: _____ **PAR #:** _____ **Fault Category:** _____ **NCR:** Yes No **DQA:** _____ **Date:** _____

Resolution: _____ **Disposition:** _____ **QA: N/C Closed:** _____ **Date:** _____

NCR:		WORK ORDER NON-CONFORMANCE (NCR)						
DATE	STEP	Description of NC Section A	Corrective Action Section B			Verification Section C	Approval Chief Eng	Approval QC Inspector
			Initial Chief Eng	Action Description Chief Eng	Sign & Date			

NOTE: Date & initial all entries

H:\fFORMS\Quality Assurance\approved QA\NCRWO RevE

Work Order ID 73365

Wednesday, August 31, 2011 12:46:39 PM

Item ID: D350-748-201 **Accept** **Setup Start** **Stop**

Revision ID:

Item Name: Crosstube Installation, High Aft

Start Date: 8/31/2011 **Start Qty:** 1.00 **Cust Item ID:**

Required Date: 9/12/2011 **Req'd Qty:** 1.00 **Customer:**

Reference:

Run Start **Stop**

Approvals: **Process Plan:** _____ **Date:** _____ **Tooling:** _____ **Date:** _____

QC: _____ **Date:** _____ **SPC (Y/N):** _____ **Date:** _____

Sequence ID/ Work Center ID	Operation Description	Set Up/ Run Hours	Tool ID	Tool #	Plan Code	Accept Qty	Reject Qty	Reject Number	Insp. Stamp
180	SprayPaint	0.00							
SprayPaint	**Memo**	0.00							
Spray Painting	1-Prime inside crosstube as per QSI 005 4.2 2-Paint Outside of Tube as per Dart QSI 005 4.2								
190	QC14- Inspect Spray Paint	0.00							
QC	**Memo**	0.00							
Quality Control	Then,Wrap in plastic bag to protect from scratches								
200	Crosstubes	0.00							
Crosstubes	**Memo**	0.00							
Crosstubes	1-Install Ground wire Insert,then insert screw and washer 2-Install Abraision strips as per Dwg D350-748-241 & QSI 035. 3-Install supports Using Dt8876 as per Dwg D350-748-241,Torque to 60-80 IN-LBS								

Dart Aerospace Ltd

W/O:		WORK ORDER CHANGES					
DATE	STEP	PROCEDURE CHANGE	By	Date	Qty	Approval Chief Eng / Prod Mgr	Approval QC Inspector

Part No: _____ **PAR #:** _____ **Fault Category:** _____ **NCR:** Yes No **DQA:** _____ **Date:** _____

Resolution: _____ **Disposition:** _____ **QA: N/C Closed:** _____ **Date:** _____

NCR:		WORK ORDER NON-CONFORMANCE (NCR)						
DATE	STEP	Description of NC Section A	Corrective Action Section B			Verification Section C	Approval Chief Eng	Approval QC Inspector
			Initial Chief Eng	Action Description Chief Eng	Sign & Date			

NOTE: Date & initial all entries

H:\fFORMS\Quality Assurance\approved QA\NCRWO RevE

Work Order ID 73365

Wednesday, August 31, 2011 12:46:39 PM

Item ID: D350-748-201

Revision ID:

Item Name: Crosstube Installation, High Aft

Start Date: 8/31/2011 **Start Qty:** 1.00

Required Date: 9/12/2011 **Req'd Qty:** 1.00

Reference:

Accept

Setup Start

Stop

Cust Item ID:

Customer:

Run Start

Stop

Approvals: **Process Plan:** _____ **Date:** _____ **Tooling:** _____ **Date:** _____

QC: _____ **Date:** _____ **SPC (Y/N):** _____ **Date:** _____

Sequence ID/ Work Center ID	Operation Description	Set Up/ Run Hours	Tool ID	Tool #	Plan Code	Accept Qty	Reject Qty	Reject Number	Insp. Stamp
210	QC5- Inspect part completeness to step on W/O	0.00							
QC	**Memo**	0.00							
Quality Control									
220	Pick Kit	0.00							
Packaging	**Memo**	0.00							
Packaging									
230	QC4- 100% Inspect kits for completeness	0.00							
QC	**Memo**	0.00							
Quality Control									

Dart Aerospace Ltd

W/O:		WORK ORDER CHANGES					
DATE	STEP	PROCEDURE CHANGE	By	Date	Qty	Approval Chief Eng / Prod Mgr	Approval QC Inspector

Part No: _____ **PAR #:** _____ **Fault Category:** _____ **NCR:** Yes No **DQA:** _____ **Date:** _____

Resolution: _____ **Disposition:** _____ **QA: N/C Closed:** _____ **Date:** _____

NCR:		WORK ORDER NON-CONFORMANCE (NCR)						
DATE	STEP	Description of NC Section A	Corrective Action Section B			Verification Section C	Approval Chief Eng	Approval QC Inspector
			Initial Chief Eng	Action Description Chief Eng	Sign & Date			

NOTE: Date & initial all entries

H:\fFORMS\Quality Assurance\approved QA\NCRWO RevE

Work Order ID 73365

Wednesday, August 31, 2011 12:46:39 PM

Item ID: D350-748-201 **Accept** **Setup** **Start**

Revision ID:

Item Name: Crosstube Installation, High Aft **Stop**

Start Date: 8/31/2011 **Start Qty:** 1.00 **Cust Item ID:**

Required Date: 9/12/2011 **Req'd Qty:** 1.00 **Customer:**

Reference:

Approvals: **Process Plan:** _____ **Date:** _____ **Tooling:** _____ **Date:** _____ **Run** **Start**

QC: _____ **Date:** _____ **SPC (Y/N):** _____ **Date:** _____ **Stop**

Sequence ID/ Work Center ID	Operation Description	Set Up/ Run Hours	Tool ID	Tool #	Plan Code	Accept Qty	Reject Qty	Reject Number	Insp. Stamp
240	Packaging	0.00							
Packaging	**Memo**	0.00							
Packaging	Identify and pack for shipping as per PPPD350-748-201 Location:_____ PPP Rev:_____								
250	QC21- Final Inspection - Work Order Release	0.00							
QC	**Memo**	0.00							
Quality Control									

MF 11-09-06

Dart Aerospace Ltd

W/O:		WORK ORDER CHANGES					
DATE	STEP	PROCEDURE CHANGE	By	Date	Qty	Approval Chief Eng / Prod Mgr	Approval QC Inspector

Part No: _____ **PAR #:** _____ **Fault Category:** _____ **NCR:** Yes No **DQA:** _____ **Date:** _____

Resolution: _____ **Disposition:** _____ **QA: N/C Closed:** _____ **Date:** _____

NCR:		WORK ORDER NON-CONFORMANCE (NCR)						
DATE	STEP	Description of NC Section A	Corrective Action Section B			Verification Section C	Approval Chief Eng	Approval QC Inspector
			Initial Chief Eng	Action Description Chief Eng	Sign & Date			

NOTE: Date & initial all entries

H:\FORMS\Quality Assurance\approved QA\NCRWO RevE

Picklist Print

Wednesday, August 31, 2011 12:46:37 PM

Work Order ID: 73365

Parent Item: D350-748-201

Parent Item Name: Crosstube Installation, High Aft

Start Date: 8/31/2011 **Required Date:** 9/12/2011

Start Qty: 1.00 **Required Qty:** 1.00

Comments:
IPP Rev: A New Issue 06-07-05 JLM
IPP Rev: B Update qty of MS21042L5 06-09-12 KJ
IPP Rev C Combined manufacturing 08.04.02 EC verified by: DD
IPP Rev:D 08-06-24 revD as per dwg DD verified by:EC
IPP Rev: E 08.12.11 Step17 was step 21 KJ Verified by:EC IPP Rev:F
10.08.04 added QSI010 4.3 DD verf:EC

Component Item ID/ Item Name	Replacement Item ID	Mfg/ Purch	Bin Item	Primary Location	Last Location	Route Seq ID	Unit of Measure	Qty on Hand	Qty per Kit	Total Qty	Qty Issued	Date Issued	Status
D350-748-241TRN Crosstube Turning Detail		Manufactured	No			110	Each	10.0000	1	1			

Location	Loc Qty	Loc Code
LG	9	
61314	0	
61315	0	
68838	1	
68839	1	
68841	1	
70653	1	
70654	1	
72330	1	
72331	1	
72332	1	
72333	1	
LG003	1	
68840	1	

11-8-31

Dart Aerospace Ltd

W/O:		WORK ORDER CHANGES					
DATE	STEP	PROCEDURE CHANGE	By	Date	Qty	Approval Chief Eng / Prod Mgr	Approval QC Inspector

Part No: _____ **PAR #:** _____ **Fault Category:** _____ **NCR:** Yes No **DQA:** _____ **Date:** _____

Resolution: _____ **Disposition:** _____ **QA: N/C Closed:** _____ **Date:** _____

NCR:		WORK ORDER NON-CONFORMANCE (NCR)						
DATE	STEP	Description of NC Section A	Corrective Action Section B			Verification Section C	Approval Chief Eng	Approval QC Inspector
			Initial Chief Eng	Action Description Chief Eng	Sign & Date			

NOTE: Date & initial all entries

H:\FORMS\Quality Assurance\approved QA\NCRWO RevE

Picklist Print

Wednesday, August 31, 2011 12:46:37 PM

Work Order ID: 73365

Parent Item: D350-748-201

Parent Item Name: Crosstube Installation, High Aft

Start Date: 8/31/2011 **Required Date:** 9/12/2011

Start Qty: 1.00 **Required Qty:** 1.00

ALS4-1032-225		Purchased	No	200	Each	1,925.000	1	1	
Insert									
			Location		**Loc Qty**	**Loc Code**			
			ST282		1925				
				110768	62				
				117717	9				
				118386	860				
				118696	994				
AN960JD10	NAS1149D0363J	Purchased	No	200	Each	0.0000	1	1	
Washer									
D2856-400		Manufactured	No	200	f	220.9845	1.181	1.243158	
Abraison Strip									
			Location		**Loc Qty**	**Loc Code**			
			ST403		9.3149				
				68076	9.3149				
			ST409		211.6696				
				63735	0.6696				
				71164	211				
1- cut as per dwg D2856									
D3502-1		Manufactured	No	200	Each	29.0000	2	2	
Support									
			Location		**Loc Qty**	**Loc Code**			
			ST063		29				
				61206	7				
				64004	10				
				68951	12				

Dart Aerospace Ltd

W/O:		WORK ORDER CHANGES					
DATE	STEP	PROCEDURE CHANGE	By	Date	Qty	Approval Chief Eng / Prod Mgr	Approval QC Inspector

Part No: _____ **PAR #:** _____ **Fault Category:** _____ **NCR:** Yes No **DQA:** _____ **Date:** _____

Resolution: _____ **Disposition:** _____ **QA: N/C Closed:** _____ **Date:** _____

NCR:		WORK ORDER NON-CONFORMANCE (NCR)						
DATE	STEP	Description of NC Section A	Corrective Action Section B			Verification Section C	Approval Chief Eng	Approval QC Inspector
			Initial Chief Eng	Action Description Chief Eng	Sign & Date			

NOTE: Date & initial all entries

H:\fFORMS\Quality Assurance\approved QA\NCRWO RevE

Picklist Print

Wednesday, August 31, 2011 12:46:37 PM

Work Order ID: 73365

Parent Item: D350-748-201

Parent Item Name: Crosstube Installation, High Aft

Start Date: 8/31/2011 **Required Date:** 9/12/2011

Start Qty: 1.00 **Required Qty:** 1.00

MS21920-20	Purchased	No	200	Each	94.0000	2	2

Clamp (per MIL-DTL-8783C)

Location	Loc Qty	Loc Code
LG050	94	
116799	10	
118236	34	
118649	50	

MS27039-1-10	Purchased	No	200	Each	295.0000	1	1

Screw

Location	Loc Qty	Loc Code
ST290	95	
117441	95	
ST291	200	
118612	200	

AN4-41A	Purchased	No	220	Each	263.0000	8	8

Bolt

Location	Loc Qty	Loc Code
ST360	263	
115108	38	
115705	50	
116191	50	
117619	50	
117795	25	
118451	50	

Dart Aerospace Ltd

W/O:		WORK ORDER CHANGES					
DATE	STEP	PROCEDURE CHANGE	By	Date	Qty	Approval Chief Eng / Prod Mgr	Approval QC Inspector

Part No: _____ **PAR #:** _____ **Fault Category:** _____ **NCR:** Yes No **DQA:** _____ **Date:** _____

Resolution: _____ **Disposition:** _____ **QA: N/C Closed:** _____ **Date:** _____

NCR:		WORK ORDER NON-CONFORMANCE (NCR)						
DATE	STEP	Description of NC Section A	Corrective Action Section B			Verification Section C	Approval Chief Eng	Approval QC Inspector
			Initial Chief Eng	Action Description Chief Eng	Sign & Date			

NOTE: Date & initial all entries

H:\FORMS\Quality Assurance\approved QA\NCRWO RevE

Picklist Print

Wednesday, August 31, 2011 12:46:37 PM

Work Order ID: 73365

Parent Item: D350-748-201

Parent Item Name: Crosstube Installation, High Aft

Start Date: 8/31/2011 **Required Date:** 9/12/2011

Start Qty: 1.00 **Required Qty:** 1.00

AN4-6A		Purchased	No	220	Each	1,052.000	16	16	
Bolt									

Location		Loc Qty	Loc Code
ST356		900	
	117872	200	
	118422	300	
	118628	400	
ST358		152	
	117514	152	

AN5-32A		Purchased	No	220	Each	204.0000	4	4	
Bolt									

Location		Loc Qty	Loc Code
ST339		50	
	118628	50	
ST340		154	
	117161	1	
	117514	2	
	117872	60	
	118191	41	
	118422	50	

AN960JD416	NAS1149D0463J	Purchased	No	220	Each	0.0000	32	32	
Washer									
AN960JD516	NAS1149D0563J	Purchased	No	220	Each	0.0000	8	8	
Washer									

Dart Aerospace Ltd

W/O:		WORK ORDER CHANGES					
DATE	STEP	PROCEDURE CHANGE	By	Date	Qty	Approval Chief Eng / Prod Mgr	Approval QC Inspector

Part No: _____ **PAR #:** _____ **Fault Category:** _____ **NCR:** Yes No **DQA:** _____ **Date:** _____

Resolution: _____ **Disposition:** _____ **QA: N/C Closed:** _____ **Date:** _____

NCR:		WORK ORDER NON-CONFORMANCE (NCR)						
DATE	STEP	Description of NC Section A	Corrective Action Section B			Verification Section C	Approval Chief Eng	Approval QC Inspector
			Initial Chief Eng	Action Description Chief Eng	Sign & Date			

NOTE: Date & initial all entries

H:\fFORMS\Quality Assurance\approved QA\NCRWO RevE

Picklist Print

Wednesday, August 31, 2011 12:46:37 PM

Work Order ID: 73365

Parent Item: D350-748-201

Parent Item Name: Crosstube Installation, High Aft

Start Date: 8/31/2011 **Required Date:** 9/12/2011

Start Qty: 1.00 **Required Qty:** 1.00

D3500-1	Manufactured	No	220	Each	16.0000	4	4
Saddle							

Location	Loc Qty	Loc Code
ST424	9	
66127	9	
ST424/25	7	
62207	7	

D3501-1	Manufactured	No	220	Each	249.0000	16	16
Bushing							

Location	Loc Qty	Loc Code
ST063	202	
68939	102	
70682	100	
ST066	47	
67757	47	

MS21042L4	Purchased	No	220	Each	3,929.000	24	24
Nut							

Location	Loc Qty	Loc Code
ST300	3929	
117441	51	
117601	637	
117885	1241	
118451	2000	

Dart Aerospace Ltd

W/O:		WORK ORDER CHANGES					
DATE	STEP	PROCEDURE CHANGE	By	Date	Qty	Approval Chief Eng / Prod Mgr	Approval QC Inspector

Part No: _____ **PAR #:** _____ **Fault Category:** _____ **NCR:** Yes No **DQA:** _____ **Date:** _____

Resolution: _____ **Disposition:** _____ **QA: N/C Closed:** _____ **Date:** _____

NCR:		WORK ORDER NON-CONFORMANCE (NCR)						
DATE	STEP	Description of NC Section A	Corrective Action Section B			Verification Section C	Approval Chief Eng	Approval QC Inspector
			Initial Chief Eng	Action Description Chief Eng	Sign & Date			

NOTE: Date & initial all entries

H:\fFORMS\Quality Assurance\approved QA\NCRWO RevE

Picklist Print

Wednesday, August 31, 2011 12:46:37 PM

Work Order ID: 73365

Parent Item: D350-748-201

Parent Item Name: Crosstube Installation, High Aft

Start Date: 8/31/2011 **Required Date:** 9/12/2011

Start Qty: 1.00 **Required Qty:** 1.00

MS21042L5	Purchased	No	220	Each	1,076.000	4	4
Nut							

Location	Loc Qty	Loc Code
ST300	1076	
116105	5	
116548	53	
117441	432	
117611	90	
118179	496	

Dart Aerospace Ltd

W/O:		WORK ORDER CHANGES					
DATE	STEP	PROCEDURE CHANGE	By	Date	Qty	Approval Chief Eng / Prod Mgr	Approval QC Inspector

Part No: _____ **PAR #:** _____ **Fault Category:** _____ **NCR:** Yes No **DQA:** _____ **Date:** _____

Resolution: _____ **Disposition:** _____ **QA: N/C Closed:** _____ **Date:** _____

NCR:		WORK ORDER NON-CONFORMANCE (NCR)						
DATE	STEP	Description of NC Section A	Corrective Action Section B			Verification Section C	Approval Chief Eng	Approval QC Inspector
			Initial Chief Eng	Action Description Chief Eng	Sign & Date			

NOTE: Date & initial all entries

H:\fFORMS\Quality Assurance\approved QA\NCRWO RevE

DART AEROSPACE LTD	Work Order:	73365
Description: Crosstube High Aft (AS350/355)	Part Number:	D350-748-201
Inspection Dwg: D350-748-241 **Rev:** E		Page 1 of 1

Required Dimension	Min	Max
Height	31.22	31.48
1/2 Span	40.77	41.03
Angle	75	77
Total Span	81.54	82.06

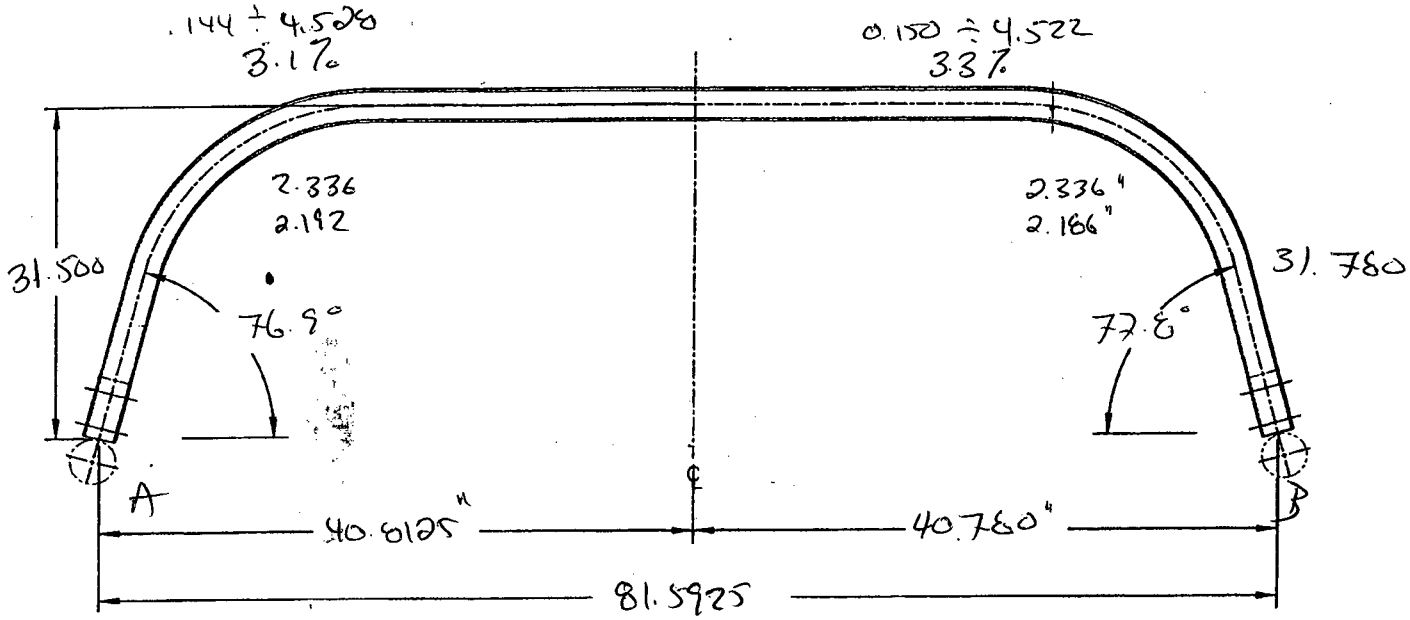

Comments
twist = 0.041"
Side A = 3.1% crashing @ 7 passes
Side B = 3.3% crashi @ 7 passes
tube has many kinks on the ends

QC15 Inspection	
Date	

Rev	Date	Change	Revised by	Approved
A	07.02.06	New Issue	KJ/JM	
B	10.08.23	Dwg Rev updated	KJ	

Dart Aerospace Ltd

W/O:		WORK ORDER CHANGES					
DATE	STEP	PROCEDURE CHANGE	By	Date	Qty	Approval Chief Eng / Prod Mgr	Approval QC Inspector

Part No: _____ **PAR #:** _____ **Fault Category:** _____ **NCR:** Yes No **DQA:** _____ **Date:** _____

Resolution: _____ **Disposition:** _____ **QA: N/C Closed:** _____ **Date:** _____

NCR:		WORK ORDER NON-CONFORMANCE (NCR)						
DATE	STEP	Description of NC Section A	Corrective Action Section B			Verification Section C	Approval Chief Eng	Approval QC Inspector
			Initial Chief Eng	Action Description Chief Eng	Sign & Date			

NOTE: Date & initial all entries

H:\fFORMS\Quality Assurance\approved QA\NCRWO RevE

Item	Qty -241	Part Number	Description
1	X	D350-748-241	CROSSTUBE ASSEMBLY (AS 350/355 HI AFT)
2	1	D6015-125	CROSSTUBE (OR D6018-125)
3	2	D3502-1	SUPPORT
4	2	D2856-400-710	ABRASION STRIP
5	1	AELS-1032-225	INSERT
6	1	NAS1149D0363J	WASHER (OR AN960JD10)
7	2	MS21920-20	CLAMP (PER DART SPEC. M-MS21920-20)
8	1	MS27039-1-10	SCREW

GENERAL NOTES:

1) MATERIAL: MANUFACTURED FROM D6015-125 OR D6018-125
   FINISHED LENGTH = 122.700±0.06
2) FINISH: MAGNETIC PARTICLE INSPECT PER DART QSI 038 4.2
   CADMIUM PLATE PER AMS-QQ-P-416B, CLASS 1, TYPE II
   PRIME INSIDE AND OUTSIDE PER DART QSI 005 4.2
   PAINT OUTSIDE PER DART QSI 005 4.2
3) TOLERANCES ARE PER DART QSI 018 UNLESS OTHERWISE NOTED.
4) UNITS: INCHES UNLESS OTHERWISE NOTED.
5) BREAK SHARP EDGES: 0.005 TO 0.010 MAX.
6) IDENTIFICATION: DART PART NUMBER "D350-748-241" AND BATCH NUMBER ON INSIDE OF CUFF PER DART QSI 044 6.4 (VIBRATING STYLUS)
7) WEIGHT: 29.85 lbs
8) PART IS SYMMETRIC ABOUT CENTERLINE, EXCEPT FOR Ø0.297 HOLE.
9) RUN CUTTER OFF PART WHERE INDICATED. BLEND OUT ALL EDGES FROM MACHINING LONGITUDINALY, TRANSITION SHOULD BE SMOOTH. NOTE: ALL HOLES ARE DRILLED AFTER BENDING.
10) BEND PROGRESSIVELY WITH A MINIMUM OF 7 PASSES. MAXIMUM TUBE FLATTENING DUE TO BENDING IS 6% BASED ON O.D.
11) HEAT TREAT TO MIN. 180 KSI PER MIL-T-6736 OR AMS 2759-1C AFTER TURNING. ACCEPTABLE TO VERIFY TENSILE STRENGTH BY HARDNESS TEST PER ASTM E18 TO 40-45 HRC.
12) INSTALL D2856-400-710 ABRASION STRIPS WITH A GAP ON BOTTOM SIDE OF CROSSTUBE, CENTERED OPPOSITE D3502-1 SUPPORT, PER QSI 035.
13) EXTREME CARE MUST BE TAKEN TO PROTECT THE OUTSIDE SURFACE OF THE TUBE. THE OUTSIDE SURFACE MUST BE SMOOTH AND FREE FROM SURFACE DEFECTS SUCH AS SCRATCHES, NICKS, OR DENTS. DEFECTS UP TO 0.005" MAY BE BLENDED OUT LONGITUDINALLY. CIRCUMFERENTIAL GRIND MARKS ARE UNACCEPTABLE. WHEN DRILLING HOLES EXTREME CARE MUST BE TAKEN AND CAREFUL DEBURRING PERFORMED TO ENSURE A CLEAN HOLE WITH NO CRACKING/CHIPPING/GROOVES.
14) TORQUE CLAMPS 60 TO 80 IN-LB. ENSURE AT LEAST 1.5 THREADS SHOWING IN SAFETY AND THAT NUT HAS NOT BOTTOMED-OUT AFTER TORQUING.
15) MAX TWIST AFTER BENDING: WITH XTUBE LAYED FLAT ON SURFACE, THE DIFFERENCE BETWEEN CUFF HEIGHTS FROM THE SURFACE MAY BE NO LARGER THAN 0.25 (ZN C1-3).

SHOP COPY
RETURN TO
ENGINEERING
UNCONTROLLED COPY
SUBJECT TO ALTERATION
WITHOUT NOTICE
WORK ORDER
NO 73365
CL 11/08/31

RELEASED
2011-01-18

REV.	DESCRIPTION	BY	DATE
F	ADD HRC TEST OPTION (B8-1) PER PAR 09-040, ADD TWIST LIMIT (A8-1, C1-3), ADD D6015-125 OPTION (C8-1), STOCK DIM NOW MACHINED (D1-4)	CP	10.11.23
E	REVISE GENERAL NOTES; UPDATE TO CURRENT STANDARDS; RELOCATED FLAG #6 PER PAR 08-046 (ZN A8-3); ADD TOLERANCES (ZN C6-3, D2-3)	RF	09.09.30
D	MAG. PARTICLE AND CAD PLATE AS MFD.	CP	06.10.31
C	ADD CAD PLATING	CP	06.08.14
B	ADD D6018-125 & PRIME AND PAINT	CP	06.06.30
A	NEW ISSUE	CP	06.03.31

DESIGN		DART AEROSPACE LTD HAWKESBURY, ONTARIO, CANADA	
DRAWN			
CHECKED		DRAWING NO.	REV. F
MFG. APPR.		D350-748-241	SHEET 1 OF 4
APPROVED		TITLE	SCALE
DE APPR.		CROSSTUBE (AS 350/355 HI AFT)	NTS
DATE	10.11.23		

COPYRIGHT © 2006 BY DART AEROSPACE LTD
THIS DOCUMENT IS PRIVATE AND CONFIDENTIAL AND IS SUPPLIED ON THE EXPRESS CONDITION THAT IT IS NOT TO BE USED FOR ANY PURPOSE OR COPIED OR COMMUNICATED TO ANY OTHER PERSON WITHOUT WRITTEN PERMISSION FROM DART AEROSPACE LTD.

Dart Aerospace Ltd

W/O:		WORK ORDER CHANGES					
DATE	STEP	PROCEDURE CHANGE	By	Date	Qty	Approval Chief Eng / Prod Mgr	Approval QC Inspector

Part No: _____ **PAR #:** _____ **Fault Category:** _____ **NCR:** Yes No **DQA:** _____ **Date:** _____

Resolution: _____ **Disposition:** _____ **QA: N/C Closed:** _____ **Date:** _____

NCR:		WORK ORDER NON-CONFORMANCE (NCR)						
DATE	STEP	Description of NC Section A	Corrective Action Section B			Verification Section C	Approval Chief Eng	Approval QC Inspector
			Initial Chief Eng	Action Description Chief Eng	Sign & Date			

NOTE: Date & initial all entries

H:\FORMS\Quality Assurance\approved QA\NCRWO RevE

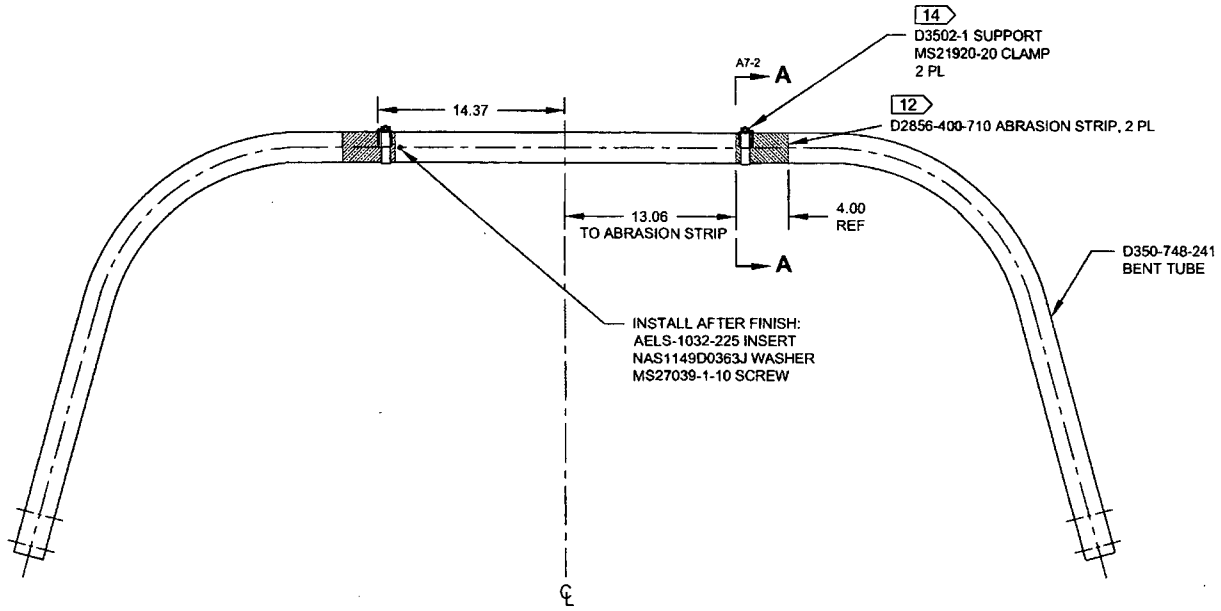

D350-748-241
ASSEMBLY DETAIL

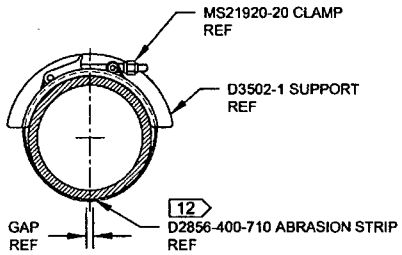

SECTION A-A D4-2
SCALE 4X

RELEASED
2011-03-19

DESIGN		**DART AEROSPACE LTD** HAWKESBURY, ONTARIO, CANADA
DRAWN		
CHECKED		DRAWING NO. D350-748-241 — REV. F — SHEET 2 OF 4
MFG. APPR.		
APPROVED		TITLE: CROSSTUBE (AS 350/355 HI AFT) — SCALE: NTS
DE APPR.		
DATE	10.11.23	

COPYRIGHT © 2006 BY DART AEROSPACE LTD
THIS DOCUMENT IS PRIVATE AND CONFIDENTIAL AND IS SUPPLIED ON THE EXPRESS CONDITION THAT IT IS NOT TO BE USED FOR ANY PURPOSE OR COPIED OR COMMUNICATED TO ANY OTHER PERSON WITHOUT WRITTEN PERMISSION FROM DART AEROSPACE LTD.

Dart Aerospace Ltd

W/O:		WORK ORDER CHANGES					
DATE	STEP	PROCEDURE CHANGE	By	Date	Qty	Approval Chief Eng / Prod Mgr	Approval QC Inspector

Part No: _____ **PAR #:** _____ **Fault Category:** _____ **NCR:** Yes No **DQA:** _____ **Date:** _____

Resolution: _____ **Disposition:** _____ **QA: N/C Closed:** _____ **Date:** _____

NCR:		WORK ORDER NON-CONFORMANCE (NCR)						
DATE	STEP	Description of NC Section A	Corrective Action Section B			Verification Section C	Approval Chief Eng	Approval QC Inspector
			Initial Chief Eng	Action Description Chief Eng	Sign & Date			

NOTE: Date & initial all entries

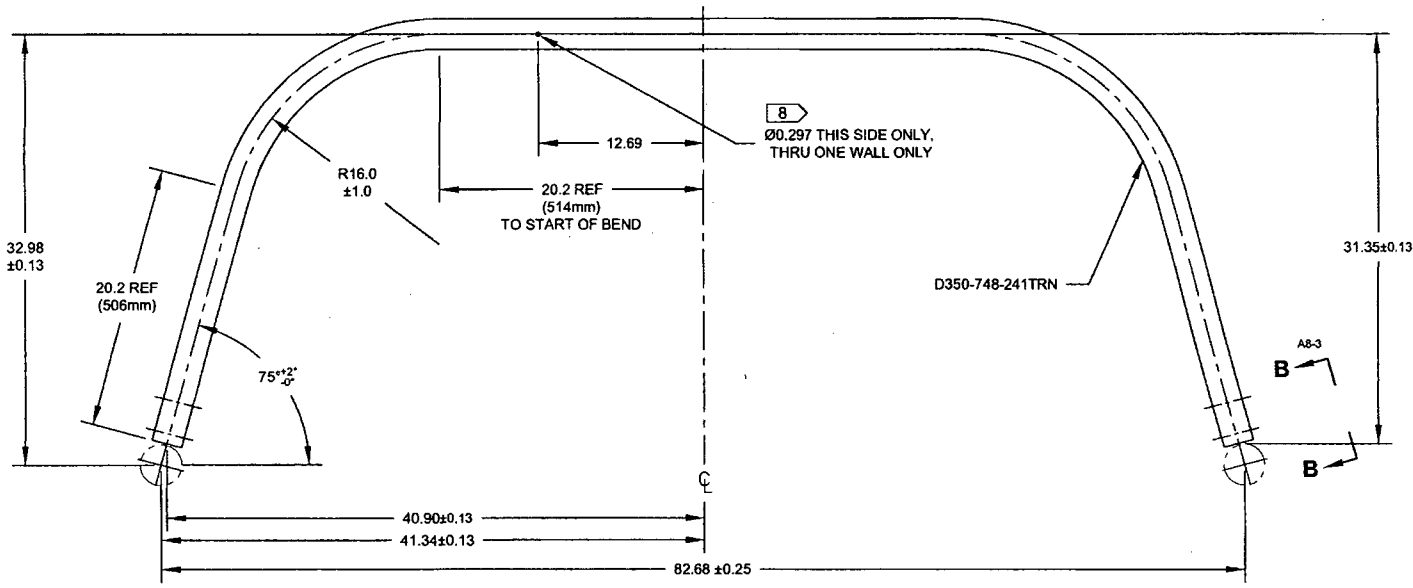

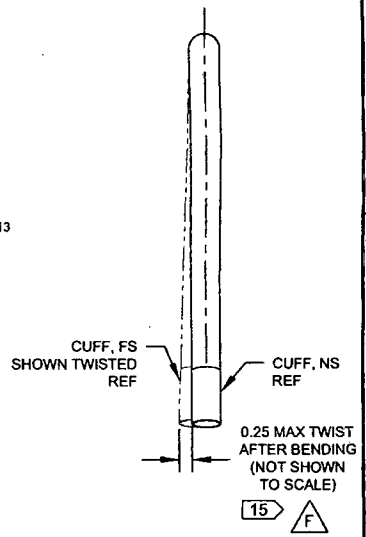

D350-748-241
BENDING AND DRILLING DETAIL 10

RELEASED
2011 -01- 18

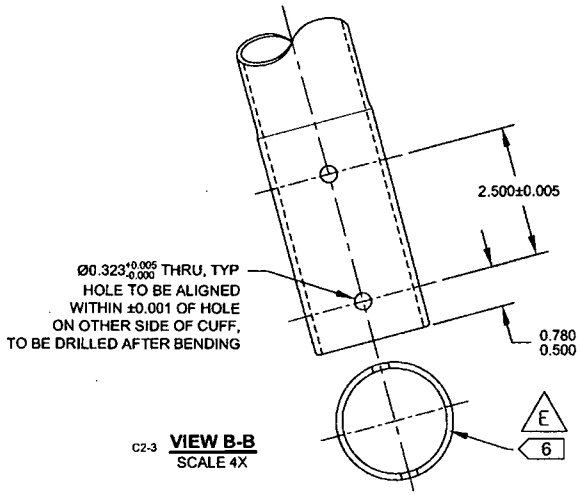

C2-3 **VIEW B-B**
SCALE 4X

DESIGN		**DART AEROSPACE LTD** HAWKESBURY, ONTARIO, CANADA
DRAWN		
CHECKED		DRAWING NO. D350-748-241 — REV. F — SHEET 3 OF 4
MFG. APPR.		
APPROVED		TITLE: CROSSTUBE (AS 350/355 HI AFT) — SCALE: NTS
DE APPR.		
DATE	10.11.23	

COPYRIGHT © 2006 BY DART AEROSPACE LTD
THIS DOCUMENT IS PRIVATE AND CONFIDENTIAL AND IS SUPPLIED ON THE EXPRESS CONDITION THAT IT IS NOT TO BE USED FOR ANY PURPOSE OR COPIED OR COMMUNICATED TO ANY OTHER PERSON WITHOUT WRITTEN PERMISSION FROM DART AEROSPACE LTD

Dart Aerospace Ltd

W/O:		WORK ORDER CHANGES					
DATE	STEP	PROCEDURE CHANGE	By	Date	Qty	Approval Chief Eng / Prod Mgr	Approval QC Inspector

Part No: _____ **PAR #:** _____ **Fault Category:** _____ **NCR:** Yes No **DQA:** _____ **Date:** _____

Resolution: _____ **Disposition:** _____ **QA: N/C Closed:** _____ **Date:** _____

NCR:		WORK ORDER NON-CONFORMANCE (NCR)						
DATE	STEP	Description of NC Section A	Corrective Action Section B			Verification Section C	Approval Chief Eng	Approval QC Inspector
			Initial Chief Eng	Action Description Chief Eng	Sign & Date			

NOTE: Date & initial all entries

H:\fFORMS\Quality Assurance\approved QA\NCRWO RevE

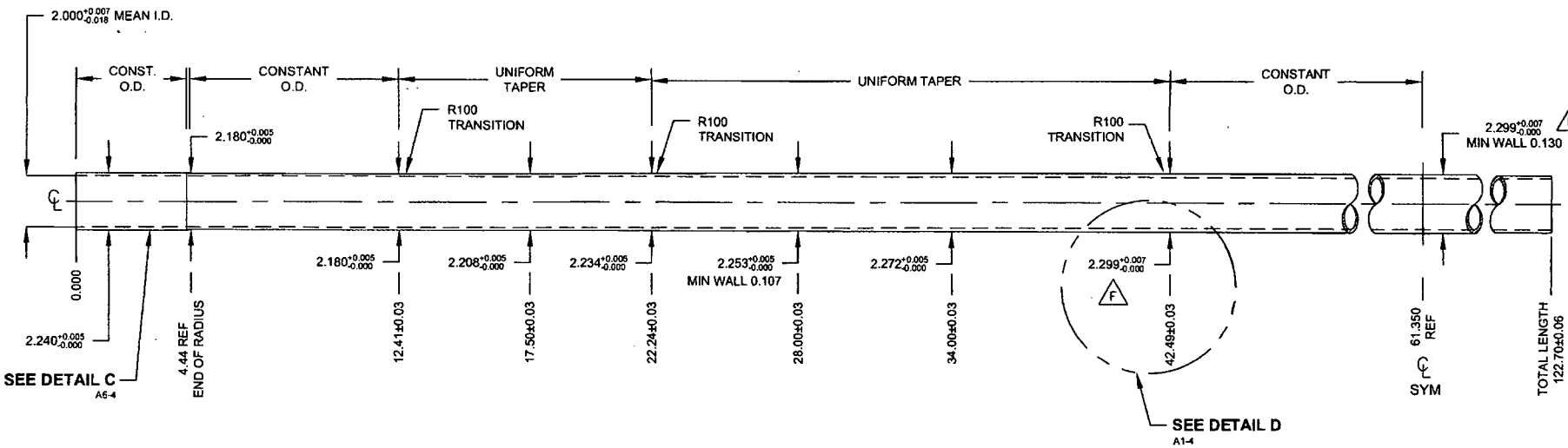

D350-748-241TRN
TURNING DETAIL

RELEASED
2011 -01- 18

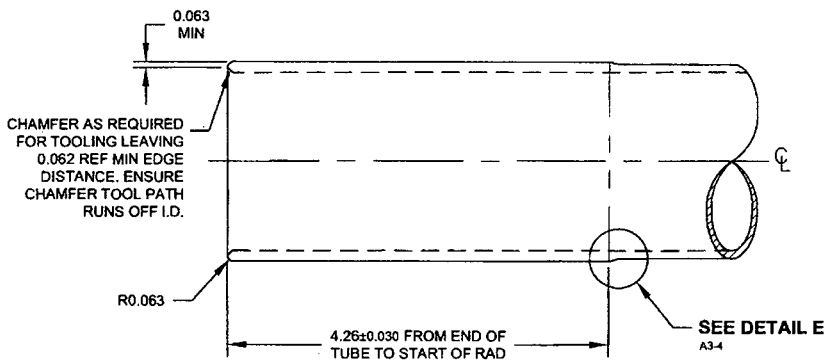

DETAIL C:
CROSSTUBE CUFF C8-4
SCALE 3X

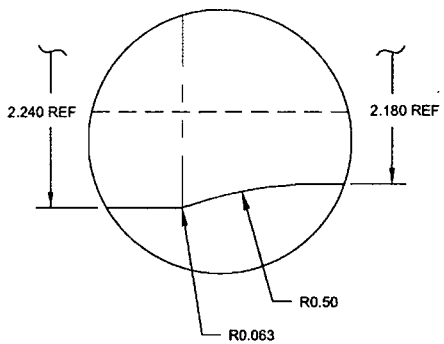

DETAIL E:
CUFF TRANSITION A5-4
NOT TO SCALE

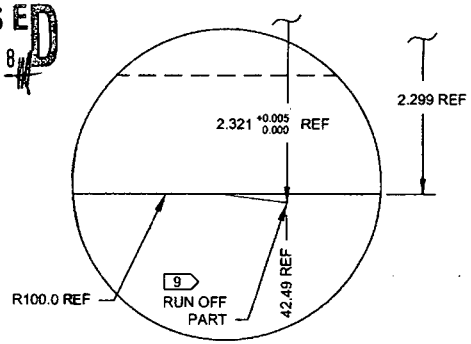

DETAIL D:
TAPER RUN-OFF C3-4
NOT TO SCALE

DESIGN		**DART AEROSPACE LTD** HAWKESBURY, ONTARIO, CANADA
DRAWN		
CHECKED		DRAWING NO. REV. F
MFG. APPR.		D350-748-241 SHEET 4 OF 4
APPROVED		TITLE SCALE
DE APPR.		CROSSTUBE (AS 350/355 HI AFT) NTS
DATE	10.11.23	

COPYRIGHT © 2006 BY DART AEROSPACE LTD
THIS DOCUMENT IS PRIVATE AND CONFIDENTIAL AND IS SUPPLIED ON THE EXPRESS CONDITION THAT IT IS NOT TO BE USED FOR ANY PURPOSE OR COPIED OR COMMUNICATED TO ANY OTHER PERSON WITHOUT WRITTEN PERMISSION FROM DART AEROSPACE LTD

Dart Aerospace Ltd

W/O:		WORK ORDER CHANGES					
DATE	STEP	PROCEDURE CHANGE	By	Date	Qty	App Chief En Prod Mgr	

Part No: _____ **PAR #:** _____ **Fault Category:** _____ **NCR:** Yes No **DQA:** _____ **Date:** _____

Resolution: _____ **Disposition:** _____ **QA: N/C Closed:** _____ **Date:** _____

NCR:		WORK ORDER NON-CONFORMANCE (NCR)						
DATE	STEP	Description of NC Section A	Corrective Action Section B			Verification Section C	Approval Chief Eng	Approval QC Inspector
			Initial Chief Eng	Action Description Chief Eng	Sign & Date			

NOTE: Date & initial all entries

H:\FORMS\Quality Assurance\approved QA\NCRWO RevE